SHINI

# Drying Loader


JST ENGINEERING CO.,LTD.

78/6 MOO 7 KING KAEW RD., RACHATEWA,
BANGPLEE, SAMUTPRAKARN 10540 THAILAND.

TEL: +66 (0) 2738 5050-4
URL: www.jst.co.th
FAX: +66 (0) 2738 5055
LINE ID: @jst.co.th
E-mail: info@jst.co.th
www.facebook.com/jst.co.th


SDL-300U

Refer carefully to the manual before operation.

# SDL-U Series

## Coding Principle

SDL - xxx U - xxx

- Options
- "U" series
- Hopper Capacity (L)
- Shini Drying Loader

Loading Control

## Features

- SDL -U integrates two-stage conveying and drying into one unit.
- Microcomputer and P.I.D. control system can accurately control the drying temperature.
- Portable design with standard footprint.
- Material contacted surfaces are made of stainless steel to ensure that materials are free from contamination.
- Full-function alarm system that can immediately respond to error.
- Standard hot air recycler reduces energy consumption without hot air and dust being discharged for cooler and cleaner working space.
- Standard material shut-off suction box formed hermetic cycle loop, to avoid material moisture regain due to ambient air, and ensure that there is no material residue in the pipe.
- Double-layer heat insulation hopper ensures uniform temperature and less heat loss.
- Weekly timer function
- Highest drying temperature of 160℃.
- Touchable HMI that for easy operation and study.

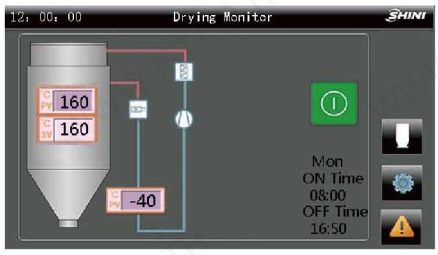


Drying Control

SDL-230U-HD

## Application

SDL-U drying loader integrates two-stage conveying and drying into single unit, which can efficiently dry most of standard hygroscopic plastics, such as PS, PP, and other plastics. The two-stage conveying can realize fully automatic conveying materials from storage tank to drying hopper, and from drying hopper to the IMM, which reduces men power and avoids contamination. SDL-U-HD drying loader is composed of the SDL-U and optional HAD twin tower compress air dryer to achieve better drying resulf than ordinary dryers. The weekly timer can reserve working hours in advance that is especially suitable for pre-drying occasions, which is applicable to pre-dry materials before IMM start as to increase productivity.

## Application

1. Photosensor hopper receiver
2. Material storage tank
3. Vaccumm pipe
4. Material  pipe
5. Vacuum hopper receiver
6. Return air
7. SDL-U

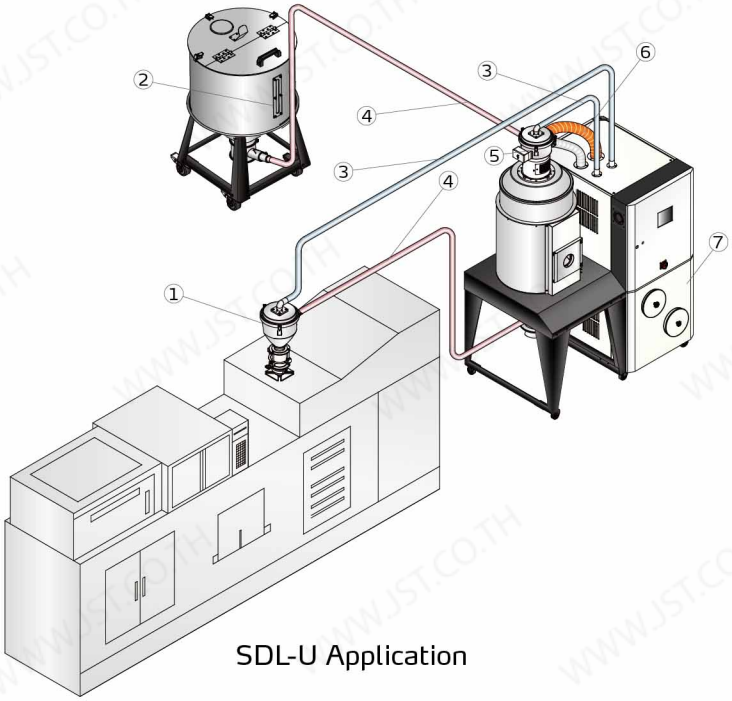


SDL-U Application

## Working Principle

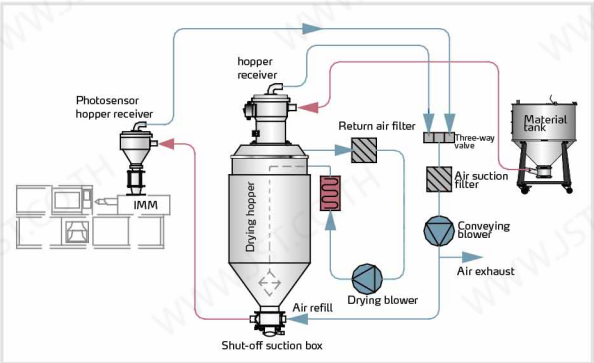


SDL-U Working Principle

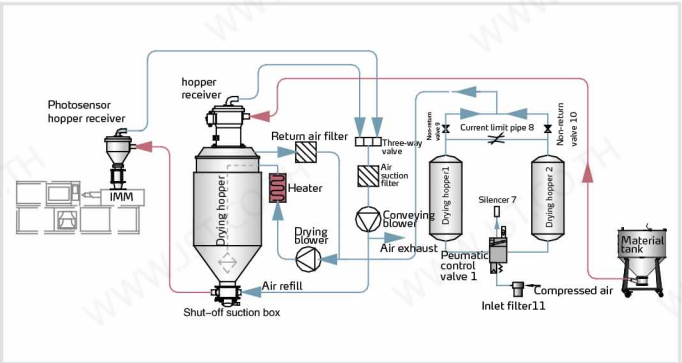


SDL-U-HD Working Principle

## Options

- Optional heatless regenerative air dryer, which could offer low dew point air at room temperature and speed up the drying of material, add "HD" at the end of the mode code.
- For models with hopper polished inside, add "P" at the end of the mode code.

# SDL-U Series

## Outline Drawing

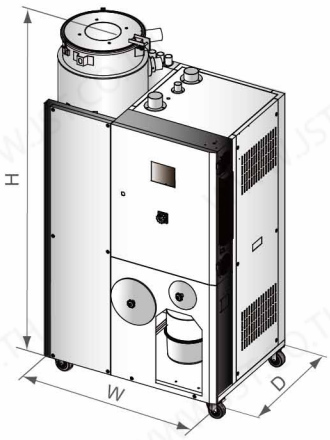


SDL-40~230U

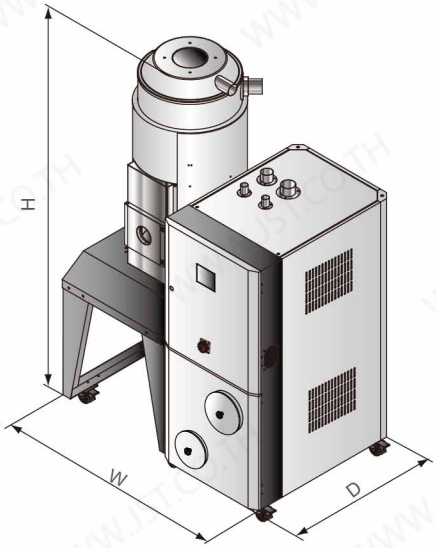


SDL-300~1200U

### Hopper

SHR-U

SVH

## Specifications

| Model SDL- | | | 40U (-HD) | 80U (-HD) | 120U (-HD) | 160U (-HD) | 230U (-HD) | 300U (-HD) | 450U (-HD) | 600U (-HD) | 750U (-HD) | 900U (-HD) | 1200U (-HD) |
|---|---|---|---|---|---|---|---|---|---|---|---|---|---|
| Drying Blower (kW, 50/60Hz) | | | 0.12/0.14 | 0.12/0.14 | 0.12/0.14 | 0.12/0.20 | 0.12/0.20 | 0.18/0.28 | 0.18/0.28 | 0.55/0.63 | 0.55/0.63 | 0.55/0.63 | 1.1/1.25 |
| Conveying Blower (kW, 50/60Hz) | | | 1.5/1.8 | 1.5/1.8 | 1.5/1.8 | 1.5/1.8 | 1.5/1.8 | 1.5/1.8 | 1.5/1.8 | 1.5/1.8 | 1.5/1.8 | 3.75/4.7 | 3.75/4.7 |
| Heater (kW) | | | 3 | 3.9 | 3.9 | 6 | 6 | 12 | 12 | 18 | 18 | 18 | 24 |
| Air Inlet Pipe (inch) | | | 2 | 2 | 2.5 | 3 | 3 | 3 | 3 | 4 | 4 | 4 | 4 |
| Air Return Pipe (inch) | | | 2 | 2 | 2.5 | 2.5 | 2.5 | 2.5 | 2.5 | 3 | 3 | 4 | 4 |
| Material Pipe (inch) | | | 1.5 | 1.5 | 1.5 | 1.5 | 1.5 | 1.5 | 1.5 | 1.5 | 1.5 | 2 | 2 |
| Drying Hopper Capacity | | L | 40 | 80 | 120 | 160 | 230 | 300 | 450 | 600 | 750 | 900 | 1200 |
| | | gal | 10.6 | 21 | 31.7 | 42.3 | 60.8 | 79.3 | 118.9 | 158.5 | 198 | 237.8 | 317 |
| SVH-L Hopper | | L | 3 | 6 | 6 | 6 | 12 | 12 | 12 | 12 | 12 | 24 | 24 |
| | | gal | 0.79 | 1.59 | 1.59 | 1.59 | 3.17 | 3.17 | 3.17 | 3.17 | 3.17 | 6.34 | 6.34 |
| SHR-U Hopper | | L | 3 | 6 | 6 | 6 | 12 | 12 | 12 | 12 | 12 | 24 | 24 |
| | | gal | 0.79 | 1.59 | 1.59 | 1.59 | 3.17 | 3.17 | 3.17 | 3.17 | 3.17 | 6.34 | 6.34 |
| Dimension | W | mm | 1081 | 1097 | 1159 | 1159 | 1159 | 1400 | 1400 | 1960 | 1960 | 1960 | 1960 |
| | | Inch | 42.6 | 43.2 | 45.6 | 45.6 | 45.6 | 55.1 | 55.1 | 77.1 | 77.1 | 77.1 | 77.1 |
| | D | mm | 841 | 841 | 841 | 841 | 841 | 1000 | 1000 | 1450 | 1450 | 1450 | 1450 |
| | | Inch | 33.1 | 33.1 | 33.1 | 33.1 | 33.1 | 39.4 | 39.4 | 57.1 | 57.1 | 57.1 | 57.1 |
| | H | mm | 1685 | 1771 | 1957 | 2102 | 2102 | 2020 | 2420 | 2450 | 2720 | 2610 | 3030 |
| | | Inch | 66.3 | 69.7 | 77 | 82.8 | 82.8 | 79.5 | 95.3 | 96.5 | 107 | 102.8 | 119.3 |
| Weight | | kg | 120 | 130 | 195 | 215 | 240 | 310 | 350 | 435 | 500 | 550 | 600 |
| | | lb | 265 | 287 | 430 | 474 | 529 | 683 | 772 | 959 | 1,102 | 1,213 | 1323 |

Notes: 1) 4~6 bar compressed air supply.
2) Power: 3Φ, 230/400/460/575VAC, 50/60Hz.

We reserve the right to change specifications without prior notice.