Hopper Dryer

JST ENGINEERING CO.,LTD.
78/6 MOO 7 KING KAEW RD., RACHATEWA,
BANGPLEE, SAMUTPRAKARN 10540 THAILAND.
TEL: +66 (0) 2738 5050-4
URL: www.jst.co.th
FAX: +66 (0) 2738 5055
LINE ID: @jst.co.th
E-mail: info@jst.co.th
www.facebook.com/jst.co.th

SHD-300U

Refer carefully to the manual before operation.

Coding Principle

SHD - xxx U - xxx

- Options
- "U" Series
- Hopper Capacity (L)
- Shini Hopper Dryer

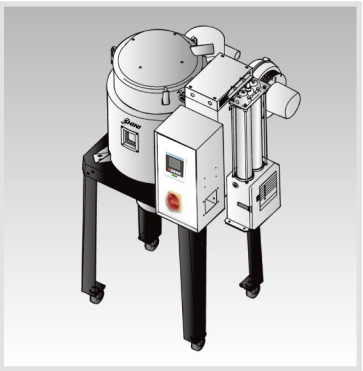

SHD-80U-HD
& Floor Stand (optional)

Features

- Adopt P.I.D temperature control and LCD display, with RS485 communication function.
- Overheat protection to ensure reliable operation.
- 7-day Timer.
- Unique design of down-blow air pipe can spread hot air evenly, keeping plastics dry and temperature stable to raise drying efficiency.
- Maximum drying temperature can reach up to 160℃
- SHD-80U and models above have hopper maintenance door for easy and effective maintenance.
- SHD-450U and below models are equipped with standard aluminum base.
- SHD-600U~750U is equipped with aluminium magnetic base. SHD-900U and model above are equipped with manual butterfly valve.
- For SHD-900U models and above, floor stand is standard accessory.
- Double-layer insulation structure ensures uniform temperature with less heat loss.
- All material contact surfaces are made of stainless steel to eliminate material contamination.

Working Principle

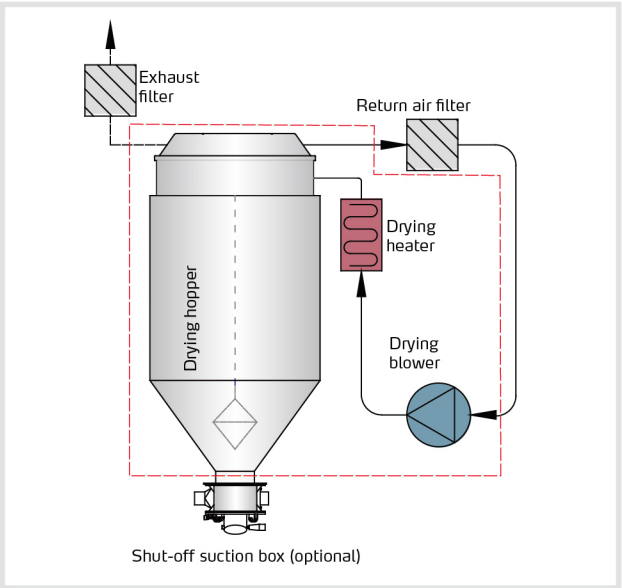

SHD-U Series

Application

SHD-U hopper dryer can efficiently dry most of standard hygroscopic plastics as to ensure high quality molding products. The concise structure makes it easy to mount on the IMM, and the drying hopper can also be directly mounted on the floor with the floor stand. Besides, there are multiple optional accessories to meet different production demands, such as hot air recycler, magnetic base and maintenance ladder etc.

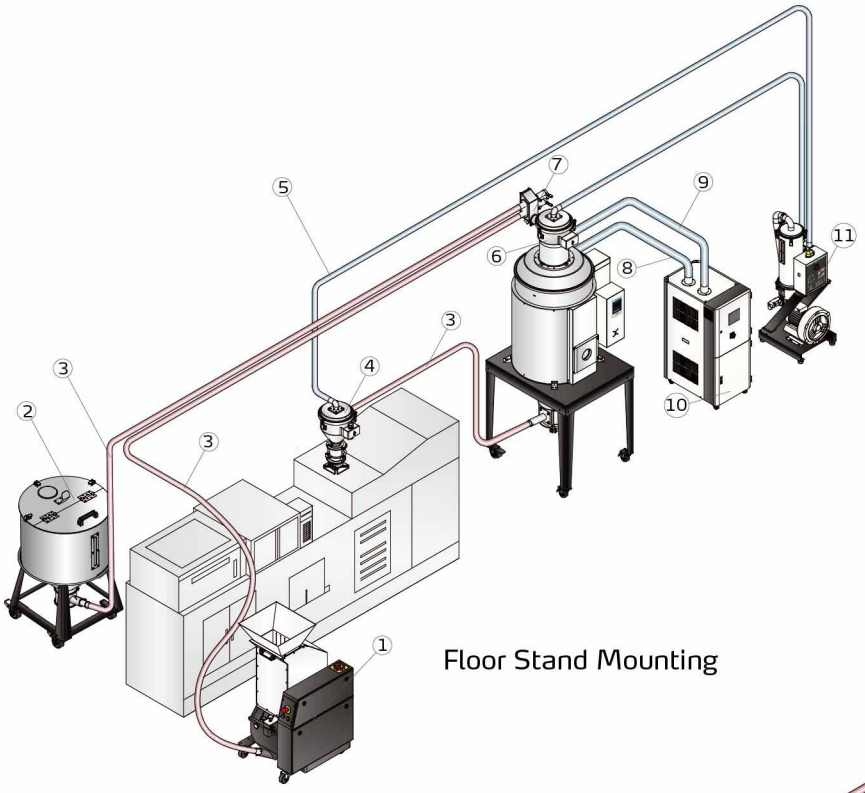

1. Low-speed granulator
2. Material tank
3. Material pipe
4. Photosensor hopper receiver
5. Vacuum pipe
6. Vacuum hopper receiver
7. Proportional valve

Floor Stand Mounting

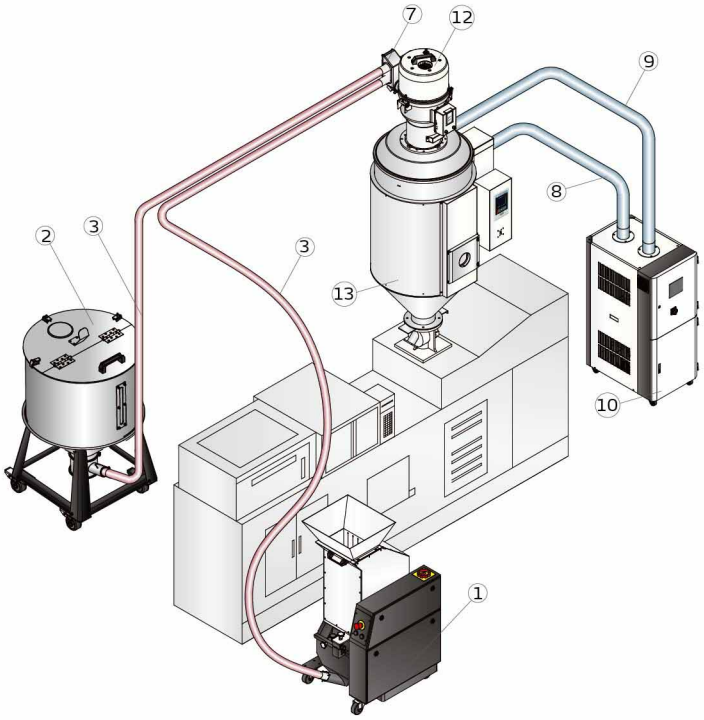

8. Dehumidifying air
9. Return air
10. Honeycomb dehumidifier
11. Main Vacuum unit
12. Auto loader
13. Hopper dryer

Direct Mounting

Outline Drawings

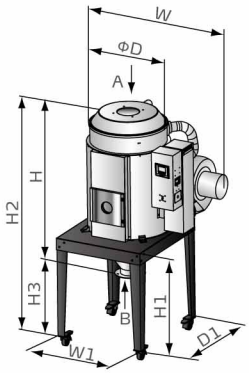

SHD-20U~750U

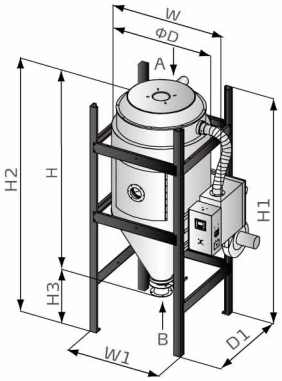

SHD-900U~1200U

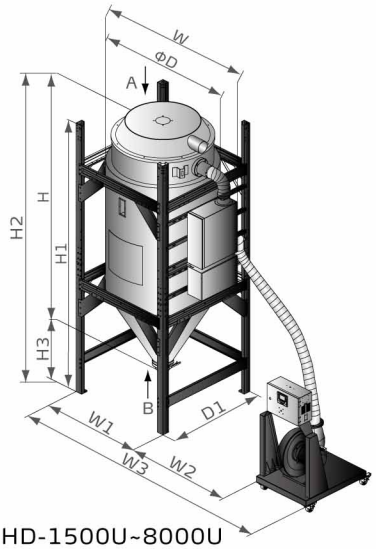

SHD-1500U~8000U

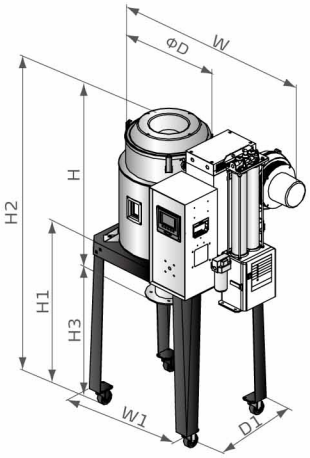

SHD-U-HD

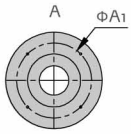

SHD-20U~750U

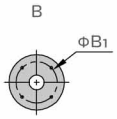

SHD-20U~450U

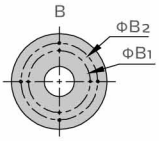

SHD-600U~750U

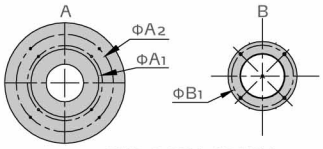

SHD-900U~8000U

Options

Safety Ladder

Optional safety ladder for SHD-1500U and above, and add "ML" at the end of the model code.

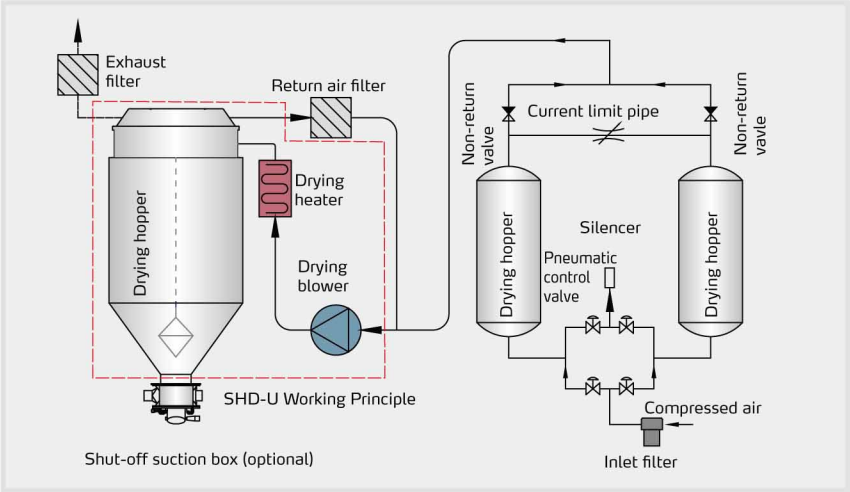

SHD-U-HD Working Principle

- Optionally equipped with heatless regenerative air dryer, which could offer low dew point air at room temperature and speed up the drying of material, Add "HD" at the end of the mode code.
- For models with hopper polished inside, add "P" at the end of the mode code.

SHD-U Series

Specifications

Model SHD-			20U	40U (-HD)	80U (-HD)	120U (-HD)	230U (-HD)	160U	230U	300U	450U	600U	750U	900U	1200U	1500U	2000U	2500U	3000U	3500U	4000U	5000U	6000U	7000U	8000U
Heater (kW)			2.2	3	3.9	3.9	6	6	6	12	12	18	18	18	24	32	32	58	58	64	64	80	96	115	128
Blower(kW)			0.05	0.12	0.12	0.12	0.12	0.12	0.12	0.18	0.18	0.55	0.55	0.55	1.1	3.7	3.7	5.5	5.5	7.5	7.5	11	15	18.5	22
Hopper Capacity	L		20	40	80	120	230	160	230	300	450	600	750	900	1200	1500	2000	2500	3000	3500	4000	5000	6000	7000	8000
	gal		5.3	10.6	21	31.7	60.8	42.3	60.8	79.3	118.9	158.5	198	237.8	317	396	528	660	793	925	1057	1321	1585	1849	2113
Dimension	H	mm	680	770	940	1190	1470	1200	1470	1430	1840	1830	2080	2330	2765	3095	3685	3735	4135	4535	4180	4775	4520	5460	6030
		inch	26.8	30.3	37	46.9	57.9	47.2	57.9	56.3	72.4	72	81.9	91.7	109	122	145	147	163	179	165	188	178	215	237
	W	mm	575	770	860	860	875	875	875	1005	1005	1250	1250	1410	1410	1640	1542	1798	1798	1798	2010	2010	2250	2250	2250
		inch	22.6	30.3	33.9	33.9	34.4	34.4	34.4	39.6	39.6	49.2	49.2	55.5	55.5	64.6	60.7	70.8	70.8	70.8	79	79	88.6	88.6	88.6
	D	mm	325	394	472	472	575	575	575	695	695	915	915	1050	1050	1250	1250	1400	1400	1400	1600	1600	1800	1800	1800
		inch	12.8	15.5	18.6	18.6	22.6	22.6	22.6	27.4	27.4	36	36	41.3	41.3	49.2	49.2	55	55	55	63	63	71	71	71
Floor Stand	H1	mm	790	790	840	840	920	920	920	970	970	1130	1130	2760	2990	3470	3870	4000	4400	4800	4550	5150	4870	5805	5620
		inch	31	31	33	33	36.2	36.2	36.2	38	38	44.5	44.5	109	118	137	152	157	173	189	179	203	192	228	221
	W1	mm	450	580	730	730	652	652	652	790	790	1000	1000	1145	1145	1340	1340	1482	1482	1482	1680	1680	1930	1930	1930
		inch	17.7	22.8	28.7	28.7	28.7	25.7	25.7	31	31	39.4	39.4	45	45	52.8	52.8	58.3	58.3	58.3	66	66	76	76	76
	W2	mm	-	-	-	-	-	-	-	-	-	-	-	-	-	400	400	400	400	400	400	400	400	400	400
		inch	-	-	-	-	-	-	-	-	-	-	-	-	-	15.7	15.7	15.7	15.7	15.7	15.7	15.7	15.7	15.7	15.7
	W3	mm	-	-	-	-	-	-	-	-	-	-	-	-	-	2000	2000	2260	2260	2260	2460	2530	2780	2830	2830
		inch	-	-	-	-	-	-	-	-	-	-	-	-	-	78.7	78.7	89	89	89	96.9	99.6	109.4	111.4	111.4
	D1	mm	550	450	560	560	795	795	795	930	930	1200	1200	1145	1145	1340	1340	1482	1482	1482	1680	1680	1930	1930	1930
		inch	21.7	17.7	22	22	31.3	31.3	31.3	36.6	36.6	47.2	47.2	45	45	52.8	52.8	58.3	58.3	58.3	66	66	76	76	76
H2		mm	1260	1300	1480	1740	2150	1825	2105	2085	2435	2470	2780	2765	3190	3470	3870	4000	4400	4800	4635	5235	4923	5840	6425
		inch	49.6	51	58.3	68.5	82	71.9	82.9	82	96	97.2	109	108.8	125.6	136.6	152.4	157.5	173	189	182.5	206	193.8	230	253
H3		mm	570	540	550	550	570	570	570	550	550	605	605	425	425	360	360	295	295	295	405	390	350	380	390
		inch	22.4	21.3	21.7	21.7	22.4	22.4	22.4	21.7	21.7	23.8	23.8	16.7	16.7	14.2	14.2	11.6	11.6	11.6	15.9	15.4	13.8	15	15.4
Air Inlet Pipe (inch)			2		2.5		3					4				5		8			8				10
Air Outlet Pipe (inch)			1.5		2		2.5					4				5		8			8				10
Net Weight	kg		37	44	85	100	115	90	100	157	182	260	265	498	578	685	770	800	900	1010	1160	1390	1530	1735	1820
	lb		82	97	187	220	253	198	220	346	401	573	584	1098	1274	1510	1698	1764	1984	2227	2557	3064	3373	3825	4012

Flange Mount Size

Model	SHD-	20U	40U	80U 120U	160U 230U	300U 450U	600U 750U	900U 1200U	1500U 2000U	2500U 3000U	3500U 4000U	5000U 6000U	7000	8000U
ΦA1	mm	231.5	231.5	254.5	254.5	254.5	254.5	254.5	254.5	254.5	254.5	254.5	254.5	254.5
	inch	9.1	9.1	10	10	10	10	10	10	10	10	10	10	10
ΦA2	mm	-	-	-	-	-	-	330	330	330	330	330	330	330
	inch	-	-	-	-	-	-	13	13	13	13	13	13	13
ΦB1	mm	140	140	140	210	210	210	210	210	210	210	210	210	210
	inch	5.5	5.5	5.5	8.3	8.3	8.3	8.3	8.3	8.3	8.3	8.3	8.3	8.3
ΦB2	mm	-	-	-	-	-	260	-	-	-	-	-	-	-
	inch	-	-	-	-	-	10.2	-	-	-	-	-	-	-

Notes: 1) Power: 3Φ, 230/400/460/575VAC, 50/60Hz.

We reserve the right to change specifications without prior notice.